USER MANUAL: How to use the PROFILOMETER DektakXT

Switch ON/OFF the profilometer

1) To switch on the profilometer press the white ON button on the EMO Box (see image below)

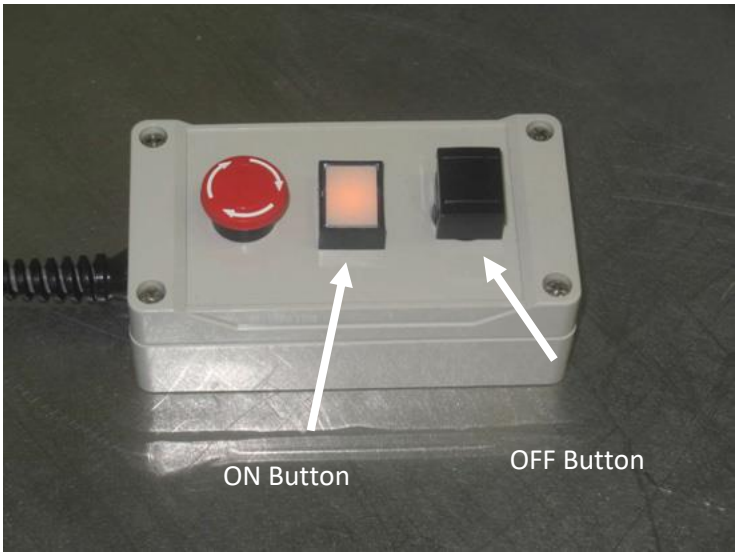

2) To Open the program click the Vision64 application button on the desktop or task bar.

3) To power down the DektakXT system: Press the black OFF button on the EMO Box

Loading the Sample

1) Click the **Unload Sample** button on the toolbar above the Live Video Display to move the scan stage forward 55 mm. You can now conveniently place a sample on the sample fixture remove it without risk of damage to the stylus or the sample.
2) Click the **Load Sample** button to move the scan stage backward its home position. Use the manual stage controls to fine-position the area of interest on the sample beneath the stylus.

Towering UP and DOWN

1) You must slowly lower the tower assembly to bring the feature that you want to measure into focus in the Live Video Display. To do this, click the **Tower Down** button on the toolbar above the Live Video Display.
2) To raise the tower assembly, click the **Tower Up** button.
3) To bring the tower all the way up to its home position, click the **Tower Home** button.

Adjusting the X-Y Position

1) To position a sample using the manual sample-positioning stage controls: *IMPORTANT: Ensure the stylus is not touching the sample surface.*
2) Click the **Tower Up** button on the toolbar.
3) Position the scan start site by using the X-Y positioning levers.

   - Pull the lever below the front of the platform for coarse X movement.
   - Pull the lever below the left side of the platform for coarse Y movement.
   - Use the respective knobs to finely position the sample.

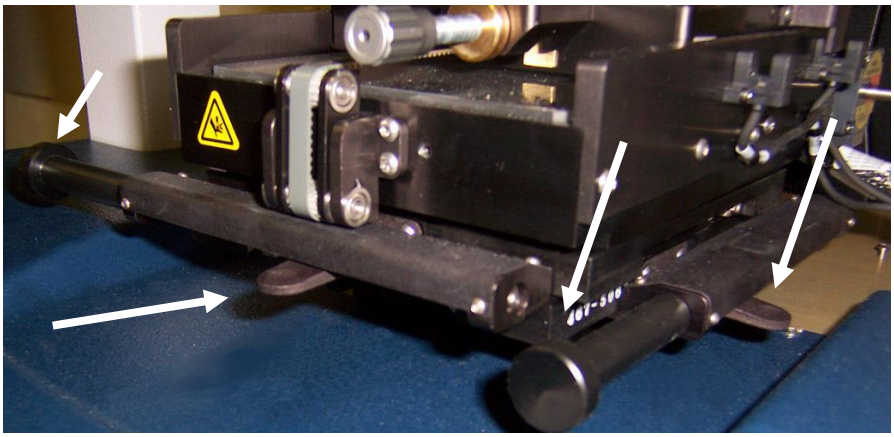

SETTING THE MEASUREMENT OPTIONS

Before taking a manual measurement or an automated series of measurements, you must make selections in the **Measurement Setup** window

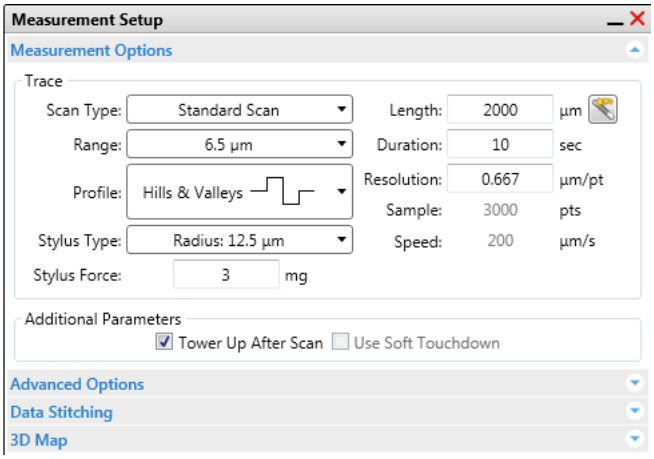

The different parameters are the followings:

- **Range:** Enter a value that indicates vertical resolution of the scan.
  When measuring extremely fine geometries, the 6.5 um range provides a vertical bit resolution of 0.1 nm. For general applications, the 1.0 nm vertical resolution of the 65.5 um range is usually adequate. When measuring thick films or very rough or curved samples, select the 524 um range with 8.0 nm resolution.*
- **Profile**: Select from the following:
  - **A) Valleys:** Provides 90% of the measurement range below the zero horizontal grid line. This option is used for measuring **etch depths**.
  - **B) Hills and Valleys:** Provides 50% of the measurement range above the zero horizontal grid line and 50% below. This option is used especially if the surface characteristics of the sample are not well known, or if the sample is out of level.
  - **C) Hills:** Provides 90% of the measurement range above
- **Stylus Type**: Select the currently installed stylus type from the drop-down list.
- **Stylus Force**: Enter a value between 1 mg and 15 mg.
- **Length**: Enter a scan length between 50 µm and 55,000 µm.
- **Duration**: Enter amount of time it will take to complete a given scan.
  Scan duration, in conjunction with scan length, determines the horizontal resolution.*
- **Resolution**: Enter the horizontal resolution for the scan length and scan duration.
  The scan resolution is expressed in µm/sample, indicating the horizontal distance between data points.*
- **Sample**: Indicates the number of data points that the system should take on the sample during a measurement.
- **Speed**: Indicates the scan speed in units of µm/s.
- **Tower Up After Scan:** Select this check box to make the DektakXT stylus profiler automatically raise the tower to a safe position after each scan.

MEASUREMENT

After you have done the previous steps, switch on the profilometer, place the sample and set up the measurements parameters, you can start the measurement. For that:

1) Click the **Measurement** button on the Ribbon and then select **Measurement**
2) You can observe the measurement in real-time in the **Data Acquisition** window.
   If the scan hits or exceeds the top or bottom border of the **Data Acquisition window, increase the **Scan Range** value in the **Measurement Options** window.****
3) At the end of the measurement, the Data Analysis window appears. To save it, click **Save> Dataset**.

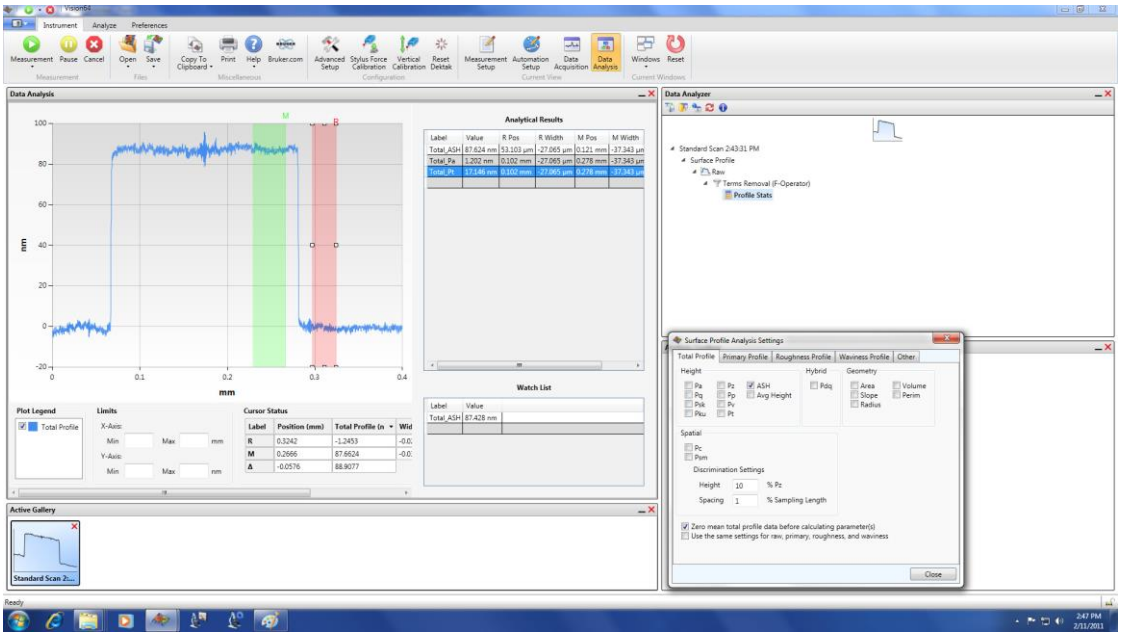

REMOVING AND INSTALLING A STYLUS

To change the stylus check the tutorial uploaded to the group's drive.

You have to be careful in this process so the stylus does not break.
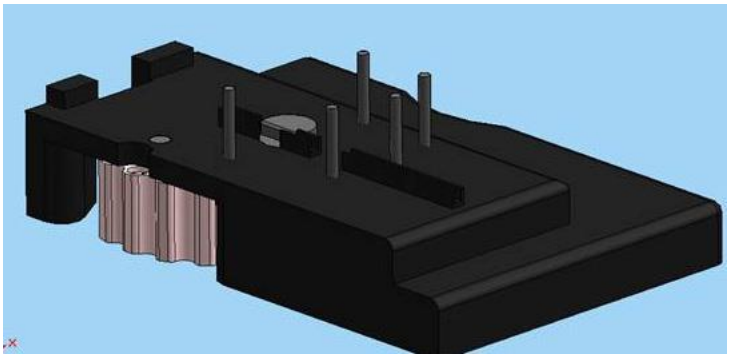
You also need to have the stylus exchange tool (image below).